RW–10958

Sub. Code
643306

M.B.A. DEGREE EXAMINATION, APRIL 2016.

Third Semester

Logistics Management

DISTRIBUTION AND TRANSPORTATION MANAGEMENT

(CBCS – 2013 onwards)

Time : 3 Hours Maximum : 75 Marks

Part A (5 × 3 = 15)

Answer **all** questions.

1. What is distribution?

2. What are marketing channels?

3. What are modes of international transport?

4. What is containerization?

5. What are the functions of transport?

Part B (5 × 10 = 50)

Answer **all** questions.

6. (a) Discuss the scope of physical distribution in logistics management.

Or

(b) Discuss the nature of distribution concept.

7. (a) Discuss the steps involved in designing distribution channel.

Or

(b) Discuss the functions of intermediaries.

8. (a) Discuss the methods of transport mode selection.

Or

(b) Discuss the methodology for transport security.

9. (a) Discuss the method of order processing.

Or

(b) What is palletization? Discuss its importance.

10. (a) Discuss the stages of distribution control process.

Or

(b) Elucidate on conflict resolution in distribution management.

Part C $(1 \times 10 = 10)$

Compulsory.

11. Study the Case below and answer the questions.

McDonalds is the world leader in QSR. Their presence in 118 countries with 33,000 restaurants glorifies its position as world leader and as fast food giant. This huge network is not easy to manage where guest expectations are clean, hygienic, tasty and quick food every time. The credit of this successful availability goes to the unique supply chain management and control over this entire huge network. McDonalds is present in more than 40 cities of India with 250 eating outlets and adding more every now and then. This huge supply chain is entirely outsourced without any legal contact with them. Some

unique features of these supply chain managements are lean management, multilayered supply chain, cold chain, Hub and Spoke system. For training their staff company takes all its measure through intensive programmes like Supplier Quality Management Systems (SQMS) and the Distributor Quality Maintenance Program (DQMP).

Question : How companies should go about in outsourcing distribution handling and outline the steps in doing so.

RW–10751

Sub. Code
622401

M.B.A. (CS) DEGREE EXAMINATION, APRIL 2016

Fourth Semester

DRAFTING AND CONVEYANCING

(CBCS – 2012 onwards)

Time : 3 Hours Maximum : 75 Marks

Part A (5 × 3 = 15)

Answer **all** questions.

All questions carry equal marks.

1. What is 'Habendum'?
2. What is an outsourcing agreement?
3. What is the purpose of appointment of a receiver?
4. Distinguish between deed of exchange and gift deed.
5. Distinguish between affidavit and petition.

Part B (5 × 10 = 50)

Answer **all** questions choosing either (a) or (b).

All questions carry equal marks.

6. (a) Describe the Fowler's five rules of drafting.

Or

(b) What are the preliminary requirements of drafting which one should consider before drafting a document?

7. (a) Draft a suspension order to be issued by the Personnel Manager to a worker for his alleged misbehaviour.

Or

(b) Briefly explain the contents of a service contract.

8. (a) Draft a deed of further charge.

Or

(b) Discuss the different kinds of mortgages in practice.

9. (a) Draft a specimen deed of assignment of shares of a company.

Or

(b) Write short notes on any three of the following : (i) Revocable power of attorney, (ii) Irrevocable power of attorney, (iii) Special power of attorney, (iv) Specific power of attorney, (v) Letters of Authority.

10. (a) What is the purpose of writ and discuss the types of writs?

Or

(b) Draft an appeal to the Commissioner of Income Tax against the order of an Assessing Officer denying an exemption for which you are eligible.

Part C (1 × 10 = 10)

Compulsory.

11. Read the following case and answer the question :

You are a salaried employee of an organization wherein your employer deducted insurance premiums from your salary and remitted to the LIC regularly. Not only the maturity payment was delayed but also the last three premiums deducted from your salary were left out by the LIC during maturity payment. Draft a petition to LIC highlighting the same in addition to demanding appropriate action and relief.

RW–10752

Sub. Code
622402

M.B.A. (CS) DEGREE EXAMINATION, APRIL 2016

Fourth Semester

CORPORATE RESTRUCTURING

(CBCS -2012 onwards)

Time : 3 Hours Maximum : 75 Marks

Part A (5 × 3 = 15)

Answer **all** questions.

All questions carry equal marks.

1. Distinguish between strategic planning and strategic implementation.

2. What is difference between merger and amalgamation?

3. What are the types of De-mergers?

4. What is an escrow account and its purpose?

5. Mention any three objectives of buy-back of shares.

Part B (5 × 10 = 50)

Answer **all** questions, choosing either (a) or (b).

All questions carry equal marks.

6. (a) Briefly describe the methods of implementation of restructuring strategies.

Or

(b) Describe the competitive advantages the companies enjoy in the context of corporate restructuring.

7. (a) What are the forms, reports, returns etc are required to be filled with the appropriate authorities at various stages of the process of merger/amalgamation?

Or

(b) Discuss the need for merger and amalgamation.

8. (a) Briefly mention the factors relevant for post-merger evaluation.

Or

(b) Discuss the salient features of the reverse merger u/s 72A of the Companies Act.

9. (a) Briefly discuss the defense strategies to takeover bids.

Or

(b) What are the legal documents required for takeover under SEBI regulation?

10. (a) Describe the SEBI regulations governing the buy-back of shares of a listed company.

Or

(b) Describe the different methods of buy-back of shares.

Part C $(1 \times 10 = 10)$

Compulsory

11. Read the following case and answer the questions.

The IDBI Bank Ltd. (IDBI) has finally walked away with United Western Bank (UWB), the Satara-based private sector bank. There were 17 commercial banks including public sector banks, private sector banks and foreign

banks, who had bid for UWB. There was also one restructuring proposal from UWB, which envisaged the help of the Maharashtra Government in association with SICOM, HDFC and its subsidiaries and associates and IDFC. These investors together had offered to pump in around Rs.350 core into the bank.

IDBI has offered Rs.28 per share to all UWB shareholders. The major institutional shareholders in UWB is SICOM, which holds around 10%. IDBI's offer of Rs.28 per share was marginally lower than SICOM's acquisition price. The IDBI's offer price works out to 1.8 times of the book value. This is higher than the average of 1.25 times for pubic sector banks' but lower than the average of three for the top 4 new private sector banks:

	IDBI	UWB
No.of branches	195	230
Deposits (Rs. in Crores)	26,000	6,480
Advances (Rs. in crores)	52,518	4,006
NP As (in%)	1.01	5.66

It is a win-win situation for IDBI, as they will be able to acquire a branch network of around 230 and around 3,000 employees of UWB. The employee acquisition, according to analysts, is equally important for IDBI as it has a high attrition rate and this acquisition will give it access to around 3,000 professional bankers at one go.

In the light of above details and other factors,

(a) Why were there so many suitors despite UWB being in a poor health?

(b) Can IDBI Bank handle post-merger Cultural issues?

(c) How does this merger fits into IDBI Bank's strategic management?

RW–10753

Sub. Code
622403

M.B.A. (CS) DEGREE EXAMINATION, APRIL 2016

Fourth Semester

Corporate Secretaryship

COMPANY SECRETARIAL PRACTICE

(2012 onwards)

Time : 3 Hours Maximum : 75 Marks

Part A (5 × 3 = 15)

Answer **all** questions.

All questions carry equal marks.

1. Explain the major role of a company secretary in an organisation.

2. What is the meaning of certificate of incorporation? How it differs from the certificate of commencement of business?

3. What are the disqualifications of directors?

4. What is resolution? What are its types?

5. What is the meaning of compliance certificate?

Part B (5 × 10 = 50)

Answer **all** questions choosing either (a) or (b).

All questions carry equal marks.

6. (a) What is the meaning of company? Who is a company secretary and what are his qualification and liabilities?

Or

(b) Explain the powers and duties of a company secretary.

7. (a) Explain the legal provisions relating to issue of bonus shares.

Or

(b) State the provisions of company law relating to issue of shares at par, premium and discount.

8. (a) State the provisions relating to the appointment and removal of directors.

Or

(b) Explain the provisions for entering contract with directors.

9. (a) What are the different types of meetings under the Companies Act, 1956?

Or

(b) What is the meaning of poll? Discuss the procedure for taking poll at a meeting.

10. (a) Explain the procedure for filing of annual accounts.

Or

(b) Define secretarial standards. Discuss its scope and advantages.

Part C $(1 \times 10 = 10)$

Compulsory

11. Answer the following questions.

(a) A public limited company has only seven shareholders, all the shares being fully paid-up. All the shares of one such shareholder are sold by the court in an auction and purchased by another shareholder. The company continues to carry on business thereafter. Discuss the liabilities of the shareholders of the company under the Companies Act, 1956.

(b) State with reason, whether the following statement is correct or incorrect, according to the Companies Act, 1956.

→ The statutory meeting is required to be held by all companies

→ A private company is required to hold the statutory meeting

→ A company should file its annual return within 6 months of the closing of the financial year.

RW–10754

Sub. Code
622404

M.B.A. (CS) DEGREE EXAMINATION, APRIL 2016

Fourth Semester

ADVANCED COST ACCOUNTING

(CBCS – 2012 onwards)

Time : 3 Hours Maximum : 75 Marks

Part A (5 × 3 = 15)

Answer **all** questions.

All questions carry equal marks.

1. How is cost accounting beneficial to management?

2. What is meant by term materials?

3. Differentiate between fixed cost and variable cost.

4. 2000 units costing Rs.4 per unit were introduced in Process I. Other expenses were Rs.1,200 normal loss was 10% of input, which had a scrap value of Re. 1 per unit. If the output is 1900 units, prepare Process I a/c.

5. What is the principle of Activity based costing?

Part B (5 × 10 = 50)

Answer **all** questions, choosing either (a) or (b).

All questions carry equal marks.

6. (a) Explain the advantages of cost accounting to different 'Stake holders' in business firms.

Or

(b) What are the problems of installing costing system? How do you overcome them?

7. (a) Briefly explain the following methods of the inventory valuation :

(i) FIFO,

(ii) LIFO,

(iii) Weighted Average.

Or

(b) What is meant by 'overhead'? What are its various classifications?

8. (a) Explain the methods of dealing with joint products and by-products in process costing.

Or

(b) What is Operating Costing? How does it differ from all other methods of costing?

9. (a) "Marginal costing is an invaluable tool used in managerial decision making". Explain.

Or

(b) Sales and profit during two years were as follows :

Year	Sales Rs.	Profit Rs.
2001	1,40,000	15,000
2002	1,60,000	20,000

Calculate :

(i) P/V Ratio,

(ii) Fixed Expenses,

(iii) Break-even point,

(iv) Sales required to earn a profit of Rs.50,000.

10. (a) From the following data compute over head variances :

	Budget	Actual
Fixed Overheads	Rs. 10,000	Rs. 12,000
Production in units	2,000	2,100
Hours	20,000	22,000

Or

(b) What do you understand by the term cost audit? What are its main objects and advantages?

Part C (1 × 10 = 10)

(Compulsory)

11. The following details are available from the costing records of a company.

	Rs.
Stock of materials 1. 1.15	35,000
Stock of materials 31.12.15	4,950
Purchase of materials	52,500
Direct wages	95,000
Factory overheads	20% of wages
Administration overheads	5% of works cost
Completed stock on hand	Rs.30,000
Sales	Rs.2,01,378

Prepare a cost sheet for the year 2015.

RW–10755

Sub. Code
622704

M.B.A. (CS) DEGREE EXAMINATION, APRIL 2016

Fourth Semester

Corporate Secretaryship

INDIRECT TAX LAWS

(2012 onwards)

Time : 3 Hours Maximum : 75 Marks

Part A (5 × 3 = 15)

Answer **all** questions.

All questions carry equal marks.

1. State the salient features of indirect taxes.

2. Write a short note on 'manufacturer' under the central excise law.

3. What is meant by VAT? Explain the need for VAT.

4. Write short notes on 'goods' under the Customs Act, 1969.

5. What are the objectives of levy of sales tax?

Part B (5 × 10 = 50)

Answer **all** questions choosing either (a) or (b).

All questions carry equal marks.

6. (a) What are the advantages and disadvantages of indirect taxes?

Or

(b) Explain the major reforms made in indirect taxation in the recent years.

7. (a) What is central excise? How does it differ from other duties?

Or

(b) What are the steps involved in classifying products in central excise?

8. (a) What are the special features of CENVAT?

Or

(b) Explain the various modes of assessment under Service Tax.

9. (a) Explain the procedure for assessment of duty under the Customs Act.

Or

(b) What are the exemptions that can be granted within the provisions of the Customs Act?

10. (a) Discuss the provisions of the CST Act regarding levy and collection of CST.

Or

(b) Distinguish inter-sale from intra-state sale.

Part C $(1 \times 10 = 10)$

(Compulsory)

11. Read the following information and state the law points that comes under the valuation of Goods under the Customs Act.

A & Co. imported second hand machinery and declared the transaction value in the Bill of Entry filed for purpose of assessment to import duty. The Asstt. Commissioner to

Customs ignored the transaction value and based on Chartered Engineer's Certificate sowing that the machinery was in working condition and had a residual life of 10 years. He completed the assessment under Rule 8 of the Customs valuation (Determination of Price of Imported Goods) Rules, 1988 after allowing maximum depreciation of 70%. Discuss briefly giving reasons whether the action of the Assistant Commissioner is valid in law.

RW–10756

Sub. Code
641401/ 643401

M.B.A. (L.M) DEGREE EXAMINATION, APRIL 2016

Fourth Semester

BUSINESS ETHICS AND CORPORATE GOVERNANCE

(Common for MBA (G)/LM)

(2012 onwards)

Time : 3 Hours Maximum : 75 Marks

Part A (5 × 3 = 15)

Answer **all** questions.

1. What is ethics? Why is it necessary?

2. What are the fundamental principles of Human resource management?

3. Define corporate governance. State its objectives.

4. Should corporate governance be mandatory or voluntary?

5. Why should corporates assume social responsibility?

Part B (5 × 10 = 50)

Answer **all** questions choosing either (a) or (b).

6. (a) Describe in brief the theories of business ethics.

Or

(b) Elaborate Kohlberg's six stage moral development process.

7. (a) Enumerate the fundamental principles to be adhered by marketing managers.

Or

(b) Explain the various rights and privileges of investors in India.

8. (a) Examine the role and responsibilities of a good board.

Or

(b) Discuss in detail the various theories of corporate governance.

9. (a) Compare and contrast corporate governance system in domestic companies and in MNCs.

Or

(b) What are the salient features of the various enactments regarding board of governors and directors?

10. (a) Describe the evolution of the concept of social responsibility.

Or

(b) Discuss the key economic issues of CSR in India.

Part C $(1 \times 10 = 10)$

(Compulsory)

11. (a) How will you measure corporate social responsibility?

(b) Enumerate the various requirements to promote and strengthen CSR.

RW–10757

Sub. Code
641402/ 643402

M.B.A. (G/LM) DEGREE EXAMINATION, APRIL 2016

Fourth Semester

PROJECT PLANNING AND MANAGEMENT

(Common for MBA (G)/LM)

(CBCS – 2012 onwards)

Time : 3 Hours Maximum : 75 Marks

Part A (5 × 3 = 15)

Answer **all** questions.

All questions carry equal marks.

1. Brief the role of Project manager.
2. What are the criteria for project selection?
3. What is sensitivity analysis?
4. What is work breakdown structure?
5. Write notes on project audit.

Part B (5 × 10 = 50)

Answer **all** questions, choosing either (a) or (b).

All questions carry equal marks.

6. (a) "A key factor of successful project management is to see a project as a series of interrelated tasks" – Discuss.

Or

(b) Describe the project development life cycle with example.

7. (a) Discuss the stages of project formulation. List the guidelines followed in project formulation.

Or

(b) Explain the project appraisal techniques in detail.

8. (a) Explain the process of project evaluation and brief about the barriers in evaluation process.

Or

(b) Discuss the different techniques to evaluate project investment.

9. (a) Define cost estimation and explain the methods involved in cost estimation.

Or

(b) Elucidate the need and importance of PERT and CPM in project management.

10. (a) Detail the contents and proforma of a project report.

Or

(b) What is project financing? Discuss the importance and sources of industrial finance.

Part C $(1 \times 10 = 10)$

Compulsory.

11. In June 1993, Diamond Engineering had grown to a company with 25 million in sales. The business base consisted of two contracts with the Reliance Department of Energy (RDOE), one for 15 million and one for 8 million. The remaining 2 million consisted of a variety of smaller jobs for 15,000 to 50,000 each. The larger contract with RDOE was a five-year contract for 15 million per year. The contract was awarded in 1988 and

was up For renewal in 1993. RDOE had made it clear that, although they were very pleased with the technical performance of Diamond, the follow-on contract must go through competitive bidding by law.

Marketing intelligence indicated that RDOE intended to spend 10 million per year for five years on the follow-on contract with a tentative award date of October 1993. On June 21, 1993, the solicitation for proposal was received at Diamond. The technical requirements of the proposal request were not considered to be a problem for Diamond. There was no question in anyone's mind that on technical merit alone, Diamond would win the contract. The more serious problem was that RDOE required a separate section in the proposal on how Diamond would manage the 10 million/year project as well as a complete description of how the project management system at Diamond functioned. When Diamond won the original bid in 1988, there was no project management requirement. All projects at Diamond were accomplished through the traditional organizational structure. Line managers acted as project leaders.

In July 1993, Diamond hired a consultant to train the entire organization in project management. The consultant also worked closely with the proposal team in responding to the RDOE project management requirements. The proposal was submitted to RDOE during the second week of August. In September 1993, RDOE provided Diamond with a list of questions concerning its proposal. More than 95 percent of the questions involved project management. Diamond responded to all questions. In October 1993, Diamond received notification that it would not be granted the contract. During a post-award conference, RDOE stated that they had no "faith" in the Diamond project management system. Diamond Engineering is no longer in business.

Questions :

(a) What was the reason for the loss of the contract?

(b) Could it have been averted?

(c) Does it seem realistic that proposal evaluation committees could consider project management expertise to be as important as technical ability?

RW–10758

Sub. Code
643403

M.B.A. (LM) DEGREE EXAMINATION, APRIL 2016

Fourth Semester

SUSTAINABLE SUPPLY CHAIN MANAGEMENT

(2012 onwards)

Time : 3 Hours Maximum : 75 Marks

Part A (5 × 3 = 15)

Answer **all** questions.

All questions carry equal marks.

1. What is Sustainable Supply Chain Management?

2. What are the components of supply chain network?

3. Write note on Driving forces for Sustainable Supply Chain.

4. What are the significances of Customer Relationship Management in Supply Chain Management?

5. What are the ways to identify sustainability gap in Supply Chain Management?

Part B (5 × 10 = 50)

Answer **all** questions, choosing either (a) or (b).

All questions carry equal marks.

6. (a) Discuss the need and importance of sustainable supply chain management.

Or

(b) Explain the drivers and metrics of Supply Chain Management.

7. (a) Briefly explain the supply chain network to E- business.

Or

(b) Explain the challenges and opportunities of global supply chain networks in the present scenario.

8. (a) Write down the role of information technology in the supply chain management.

Or

(b) Discuss the various ways to attain economics of scale in supply chain management.

9. (a) Explain the benefits and uses of performance management.

Or

(b) Discuss various methods and approaches of CRM in Supply Chain Strategy.

10. (a) Critically evaluate the managing of sustainability gap within and outside the organization.

Or

(b) What are the standards and infrastructure constrains of supply chains to the stake holders?

Part C $(1 \times 10 = 10)$

(Compulsory)

11. Read the following case and answer the questions :

Case Problem : Drivers for and methods to optimize the supply chain Company Whirlpool.

Whirlpool Corporation is a leader of the $100 billion global home appliance industry. Ranked sixth in the

electronics industry list of FORTUNE magazine's "World's Most Admired Companies", Whirlpool Corporation is a Fortune 500 company and the world's leading manufacturer and marketer of major home appliances. Annual sales are approximately $19 billion, and there are 70,000 employees, with 69 manufacturing and technology research centers around the world. Founded in 1911, the company markets Whirlpool, Maytag, Kitchen Aid, Jenn-Air, Amana, Brastemp, Consul, Bauknecht and other major brand names to consumers in most countries around the world. Whirlpool manufactures appliances across all major categories, including fabric care, cooking, refrigeration, dishwashers, countertop appliances garage organization and water filtration. Whirlpool is committed to a brand value-creation strategy-focusing on innovation, cost productivity, product quality and consumer value. The company continues to improve its global operating platform to ensure it is the best-cost and best-quality appliance manufacturer worldwide. Its supply chain has been transformed to better deliver products to trade customers and consumers. The benefits of actions are evident through a stronger network, increased efficiencies and timely deliveries. Whirlpool Corporation is committed to building products which consumers around the world can depend upon to meet their daily needs.

This commitment to quality begins in the concept stages and continues throughout the lifetime of the appliance. The result of these efforts is a sustainable and competitive advantage for the company. Globally, Whirlpool Corporation manufactures products using principles of lean manufacturing and operational excellence to ensure continuous improvement of processes and to produce products that meet the company's high-quality standards. At Whirlpool, there is a constant focus on seeking out new and unique ways to improve the function, performance and sustainability of products.

After acquiring the Maytag Corporation on March 31, 2006, Whirlpool Corporation became the largest home appliance maker in the world.

Questions :

(a) What were the benefits of change to the supply chain when implementing SCM strategy?

(b) Describe the Whirlpool strategy.

RW–10759

Sub. Code
643404

M.B.A. DEGREE EXAMINATION, APRIL 2016

Fourth Semester

Logistics Management

LOGISTICS POSITIONING AND ROUTING

(2012 onwards)

Time : 3 Hours Maximum : 75 Marks

Part A (5 × 3 = 15)

Answer **all** questions.

1. What is pooled delivery?
2. What do you mean by transportation economics?
3. Write a short note on fleet utilization.
4. What is inbound and outbound logistics?
5. List out the various location models.

Part B (5 × 10 = 50)

Answer **all** the questions.

6. (a) What is logistics reengineering? Explain the steps involved in reengineering procedure.

Or

(b) Explain the manufacturing postponement and logistics postponement briefly.

7. (a) Explain SCOR Model in detail.

Or

(b) What are the various warehouse location patterns?

8. (a) List out the various factors that influence transportation decisions and also explain the participants in transportation decisions.

Or

(b) Discuss the five modes of transportation, identifying the most significant characteristics of each.

9. (a) Distinguish between CPM and PERT and also list out the pros and cons of CPM and PERT.

Or

(b) What is sensitivity analysis and its role in system design and analysis.

10. (a) Explain the third party and fourth party logistics and list out their advantages.

Or

(b) Explain the location decisions in detail.

Part C $(1 \times 10 = 10)$

Compulsory

11. The distribution challenge :

Spicers Papers Ltd. was faced with an elemental problem of measuring basic productivity. Spicers is a distributor of high-end paper products to the printing industry. Based in Australia, it has sales of about $1 billion, a third of which are in the United States, according to Richard Maron, general manager of distribution and warehousing at U.S. headquarters in Santa Fe Springs, California.

The Spicers operation is fairly complex. Working out of six locations in the western United States, it ships product in a variety of ways, including cartons, skids, boxes and gigantic rolls. But when Marron arrived, he had no way of assessing the productivity of its warehouse or delivery personnel.

A more diversified company might have launched an elaborate program for measuring operations down to the minute, and then spilled the data onto reams of spreadsheets and management reports. Spicers didn't have that luxury, says Maron. It needed something cheap, simple, accurate and fast.

Maron was given 30 days or less to come up with a way to measure productivity at each of the U.S. warehouses. The reporting requirements could take no more than 20 minutes out of the 10 to 11 hour days of the warehouse managers.

Exactly what information would you require from the warehouse managers and what formulas would you use, and how would you chart it?

RW–10760

Sub. Code
643405

M.B.A. DEGREE EXAMINATION, APRIL 2016

Fourth Semester

Logistics Management

MODERN PLANT MANAGEMENT

(2012 onwards)

Time : 3 Hours Maximum : 75 Marks

Part A (5 × 3 = 15)

Answer **all** questions.

1. What is plant location?
2. What are the functions of production planning?
3. Brief the cost of poor quality.
4. Why time management is important for productivity?
5. What is RFID?

Part B (5 × 10 = 50)

Answer **all** questions choosing either (a) or (b).

6. (a) Analyse the impact of plant location with regard to supply chain and logistics performance.

Or

(b) Exotech Computers manufactures computer components such as chips, circuit boards motherboards keyboards. LCD panels and the like and sells them around the world. It wants to construct a new warehouse/distribution center in Asia to serve emerging Asian markets. It has identified sites in Shanghai. Hong Kong, and

Singapore and has rated the important location factors for each site as follows :

Location factor	Weight	Scores (0 to 100)		
		Location A	Location B	Location C
Political stability	0.25	50	80	90
Economic growth	0.18	90	80	75
Port facilities	0.15	60	95	90
Container support	0.10	50	80	90
Land and construction cost	0.08	90	50	30
Transportation/distribution	0.08	50	80	70
Duties and traffic	0.07	70	90	90
Trade regulations	0.05	70	95	95
Airline service	0.02	60	80	70
Area roads	0.02	60	70	80

Recommend a site based on these location factors and ratings.

7. (a) Discuss the advantages and disadvantages of cellular layouts. How does a cellular layout combine a product and process layout'

Or

(b) Mohawk Valley Furniture Warehouse has purchased a retail outlet with six departments, as shown below. The anticipated number of customers that move between the departments each week is given in the load summary chart.

(i) Calculate the nonadjacent loads for the layout shown below

(ii) Revise Mohawk's layout such that nonadjacent loads are minimized

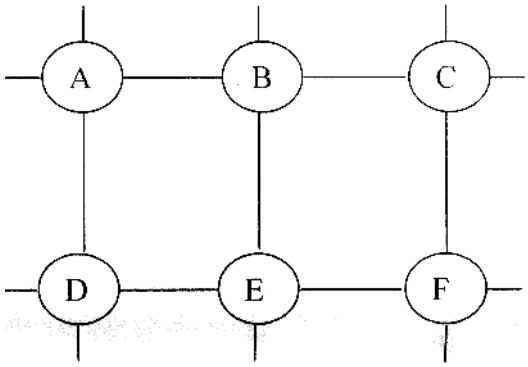

From/To Department	A	B	C	D	E	F
A	–	70				50
B		–			100	
C		70	–			
D			80	–		
E	40					30
F		60			100	

8. (a) Explain the objectives of TPM pillars.

Or

(b) Analyse and compare the cost benefits of preventive and breakdown maintenance.

9. (a) Identify the tools and techniques used for improving productivity in a manufacturing environment and also evaluate the impact of each tool.

Or

(b) Evaluate the significance of top management role in productivity management and crisis management.

10. (a) What are the objectives of lean manufacturing philosophy and also discuss the outcome of implementing lean manufacturing?

Or

(b) Analyse and compare DMAIC process and KAIZEN.

Part C (1 × 10 = 10)

Compulsory.

11. The Model J Wagon is to he assembled on a Conveyor belt. Five hundred wagons are required per day. Production time per day is 420 minutes and the assembly steps and times for the wagon are given in the following table. Find the balance that minimized the number of workstations, subject to cycle time and precedence constraints.

Tasks	In seconds	Description	Must precede
A	45	Position rear axle support and hand fasten screws to nuts	–
B	11	Insert rear axle	A
C	9	Tighten rear axle support screws to nuts	B
D	50	Position front axle assembly and hand fasten with four screws to nuts	–
E	15	Tighten front axle assembly screws	D
F	12	Position rear wheel #1 and fasten hubcap	C
G	12	Position rear wheel #2 and fasten hubcap	C
H	12	Position front wheel #1 and fasten hubcap	E
I	12	Position front wheel #2 and fasten hubcap	E
J	8	Position wagon handle shaft on front axle assembly and hand fasten bolt and nut	F, G, H, I
K	9	Tighten bolt and nut	J

RW–10761

Sub. Code
643406

M.B.A. (LM) DEGREE EXAMINATION, APRIL 2016.

Fourth Semester

LOGISTICS QUALITY MANAGEMENT

(2012 onwards)

Time : 3 Hours Maximum : 75 Marks

Part A (5 × 3 = 15)

Answer **all** questions.

1. What is meant by integrated logistics quality?

2. Write a note on supply chain performance indicators.

3. What do you mean by reverse logistics?

4. What is remanufacturing?

5. What is meant by third-party logistics firm?

Part B (5 × 10 = 50)

Answer **all** questions, choosing either (a) or (b).

6. (a) Briefly discuss the various risks associated with quality management in logistics.

Or

(b) Enumerate the major challenges of quality management in logistics.

7. (a) Analyse the various environmental factors affecting quality in logistics.

Or

(b) Explain the social responsibilities of logistics managers in ensuring quality in logistics.

8. (a) How an effective reverse logistics be designed?

Or

(b) Elaborate the major ingredients of consumer electronics recycling.

9. (a) Examine the various approaches in ensuring quality in services industry.

Or

(b) Write a detailed note on TQM and its applications to logistics.

10. (a) Describe the importance of third party logistics providers.

Or

(b) Identify the factors influencing supply chain network design decisions.

Part C $(1 \times 10 = 10)$

Compulsory.

11. Critically evaluate the applications of various quality techniques in LSCM.

RW–10762

Sub. Code
643407

M.B.A. DEGREE EXAMINATION, APRIL 2016

Fourth Semester

Logistics Management

INTERNATIONAL LOGISTICS AND SCM

(2012 onwards)

Time : 3 Hours Maximum : 75 Marks

Part A (5 × 3 = 15)

Answer **all** questions.

1. What is international logistics?

2. Mention the importance of customer service in international logistics.

3. What is risk in global logistics?

4. Mention the merits of ocean transport.

5. What do you mean by sourcing?

Part B (5 × 10 = 50)

Answer **all** questions, choosing either (a) or (b).

6. (a) Discuss the impact of global logistics on international business.

Or

(b) Narrate the functions of global logistics.

7. (a) Enumerate the major ingredients of retail logistics.

Or

(b) Explain the fundamental dimensions of customer service.

8. (a) Examine the methods of handling risks in global logistics.

Or

(b) Describe the major functions of logistics information system.

9. (a) Explain the results achieved by England Logistics.

Or

(b) Enumerate the major developments in Western European logistics strategies.

10. (a) "Logistics and SCM act as a tool for integrating international operations" – Comment.

Or

(b) Discuss the role of transportation in logistics.

Part C $(1 \times 10 = 10)$

Compulsory.

11. Briefly discuss the role of logistics manager in improving customer services.

RW–10954

Sub. Code
643104

M.B.A. DEGREE EXAMINATION, APRIL 2016

Logistics Management

EXPORT AND IMPORT MANAGEMENT

(2013 onwards)

Time : 3 Hours Maximum : 75 Marks

Section A (5 × 3 = 15)

Answer **all** the questions.

1. State the merits of multinational corporations.

2. What is Bill of Lading? Mention its purposes.

3. What do you mean by containerisation?

4. Write a note on certificate of origin and Blacklist certificate.

5. Define Packing credit.

Section B (5 × 10 = 50)

Answer **all** the questions.

6. (a) Trace out the evolution of export and import in India.

Or

(b) Discuss the different steps involved in the execution of an export order.

7. (a) Enumerate the various incetives available to exporters in India.

Or

(b) How do you measure economic exposure?

8. (a) Mention the Salient features and merits of ocean transport.

Or

(b) Discuss the role of transportation in logistics.

9. (a) What are the common contract terms used in international trade? Explain the significance of these terms as far as they affect the buyer and the seller.

Or

(b) Analyse the different types of finance facilities available from commercial sanks to exporters in India.

10. (a) Elaborate the role of information technology in international business.

Or

(b) Enumerate the ingredients of India's foreign trade with Australia and New Zealand.

Section C $(1 \times 10 = 10)$

Compulsory

11. Discuss the respective roles of various institutions in India working towards export promotion.

RW–10955

Sub. Code
643106

M.B.A. DEGREE EXAMINATION, APRIL 2016

Logistics Management

SHIPPING AND MARITIME LAW

(2013 onwards)

Time : 3 Hours Maximum : 75 Marks

Part A (5 × 3 = 15)

Answer **all** questions.

1. Mention any four duties of an agent.

2. Distinguish between sale and agreement to sell.

3. Distinguish common carrier from private carrier.

4. List down the features of a bill of lading.

5. What is baggage check?

Part B (5 × 10 = 50)

Answer **all** questions by choosing either (a) or (b).

6. (a) Discuss the different modes in which the authority of an agent may terminate.

Or

(b) What are the various ways in which a contract may be discharged?

7. (a) State the doctrine of caveat emptor and exceptions to it.

Or

(b) State and explain the exceptions to the rule 'Nemodat qui non habet'.

8. (a) State the liability of a common carrier under the Carriers Act 1865.

Or

(b) Explain the various documents of carriage by air.

9. (a) What is a charter party? Explain its kinds and contents.

Or

(b) What do you mean by bill of lading? Elucidate its kinds and functions?

10. (a) What is the jurisdiction of a consumer disputes redressal forum? In what manner is a complaint field before it? What procedure is followed by it after receiving a complaint?

Or

(b) Analyse the contractual and tort actions that can be taken against the carrier in case of damage in transit.

Part C $(1 \times 10 = 10)$

Compulsory.

11. (a) Differentiate a bill of lading from a charter party.

(b) Elaborate the rights and duties of a principal and an agent.

RW–10956

Sub. Code
643304

M.B.A. DEGREE EXAMINATION, APRIL 2016

Third Semester

Logistics Management

ADVANCED MATERIALS AND INVENTORY CONTROL

(CBCS – 2013 onwards)

Time : 3 Hours Maximum : 75 Marks

Part A (5 × 3 = 15)

Answer **all** questions.

1. What is materials research?

2. What is FSN analysis? Give an example.

3. List the advantages of inventory control.

4. What is value analysis?

5. What is EOQ?

Part B (5 × 10 = 50)

Answer **all** questions.

6. (a) Discuss the scope of integrated materials management.

Or

(b) Discuss the steps in materials planning and budgeting.

7. (a) Discuss the steps involved in ABC analysis for materials management.

Or

(b) Discuss the methods of forecasting for materials management.

8. (a) Discuss the methods of valuation of different types of inventory.

Or

(b) What is JIT? What are its pros and cons?

9. (a) Discuss the process involved in stores management.

Or

(b) Discuss the various principles of materials handling.

10. (a) Discuss the aspects of OR techniques for inventory management.

Or

(b) Elucidate on how to conduct performance appraisal for materials management department.

Part C $(1 \times 10 = 10)$

Compulsory

11. Study the Case below and answer the question(s)

Maruti has adopted the Japanese System, JIT to achieve higher operational efficiencies and reduce inventory carrying cost. JIT improves the return on investment of a business by reducing in-process inventory and its associated carrying costs. To achieve JIT material supplies, the company gives preference to locally based

suppliers and encourages far distance suppliers to set up base close to Maruti Suzuki's facilities. Over 76% of the company's 246 suppliers are located within 100 kms of radius. They have strategically located the suppliers of bulky components such as instrument panels, fuel tanks, bumpers, seats, etc. adjacent to the company's manufacturing facilities in the Suppliers' Park. The JIT system has evolved over the last 25 years in the company from monthly scheduling to daily scheduling of parts orders and finally, in 2003, to e-nagare system i.e. the release of schedules on hourly systems, a practice that aids in maintaining less than two hours inventory of components within the company. The e-nagare system is successfully running today at the company and helps in maintaining the right material inventory, at the right time, at the right place and in the exact amount without the safety net of excess inventory, thus reducing high inventory carrying cost.

Question: What are the principles of Just In time inventory that has been adopted by Maruti? What are the advantages of JIT?

RW–10957

Sub. Code
643305

M.B.A. DEGREE EXAMINATION, APRIL 2016.

Third Semester

Logistics Management

STRATEGIC PROCUREMENT MANAGEMENT

(CBCS – 2013 onwards)

Time : 3 Hours Maximum : 75 Marks

Part A (5 × 3 = 15)

Answer **all** questions.

1. What is demand management?

2. What is a supply chain?

3. What is E-procurement?

4. What is supply wheel?

5. What is global sourcing?

Part B (5 × 10 = 50)

Answer **all** questions.

6. (a) Discuss the scope of procurement in logistics management.

Or

(b) Discuss the nature of public sector procurement.

7. (a) Discuss the steps involved in make or buy decision.

Or

(b) Discuss the methods of supplier selection.

8. (a) Discuss the methods of Capital procurement.

Or

(b) Discuss the methodology for Cost Benefit analysis.

9. (a) Discuss the development of supply strategy.

Or

(b) What are the organizational structures for procurement management? Discuss.

10. (a) Discuss the ethical issues in procurement management.

Or

(b) Elucidate on contract management for supply management.

Part C $(1 \times 10 = 10)$

Compulsory.

11. Study the Case below and answer the questions :

Recessions typically also bring along a liquidity crisis. Receivables not only expand in time but also become difficult to collect. Organizations find themselves under pressure to deploy more capital to manage much lower volume of sales than they did during other times.

Many get into the mode of using vendors' cash to improve their conditions. Short-term tactics like :

Adhoc delays in vendors' payments.

Formal increase in payable periods.

Delayed off take of material made by vendors, even after, it is made as per confirmed schedules. Both approaches of pushing "capital" and "costs" back to vendors are myopic and have disruptive ramifications for organizations not only in the long term but also in the short term.

Question :

(a) Discuss the importance of developing suppliers as part of the company strategy in the long term.

(b) What will be effect of actions of companies on suppliers as discussed above?

RW–10741

Sub. Code
643206

M.B.A. DEGREE EXAMINATION, APRIL 2016

Second Semester

Logistics Management

PRINCIPLES OF LOGISTICS AND SCM

(2012 onwards)

Time : 3 Hours Maximum : 75 Marks

Part A (5 × 3 = 15)

Answer **all** questions.

1. State the objectives of business logistics.

2. Write a note on reverse logistics.

3. What is supply chain management?

4. What is supply chain strategy?

5. Write short notes on E-logistics.

Part B (5 × 10 = 50)

Answer **all** questions, Choosing either (a) or (b).

6. (a) Briefly discuss the functional applications of logistics.

Or

(b) Explain the importance of logistics.

7. (a) Transportation is a key activity in the logistics value chain -comment.

Or

(b) Enumerate the factors motivating of global logistics.

8. (a) Examine the factors determining the success of supply chain.

Or

(b) Examine the key decision areas of supply chain.

9. (a) Briefly discuss the logistic system analysis strategy.

Or

(b) Write short notes on :

(i) Simulation

(ii) Decision support system.

10. (a) Analyse the role of supply chain in e-business and b2b practices.

Or

(b) Elucidate the role of government in international logistics.

Part C $(1 \times 10 = 10)$

Compulsory

11. (a) Analyse the principal characteristics of logistics in different countries.

(b) Enumerate the role of logistics in different industries.